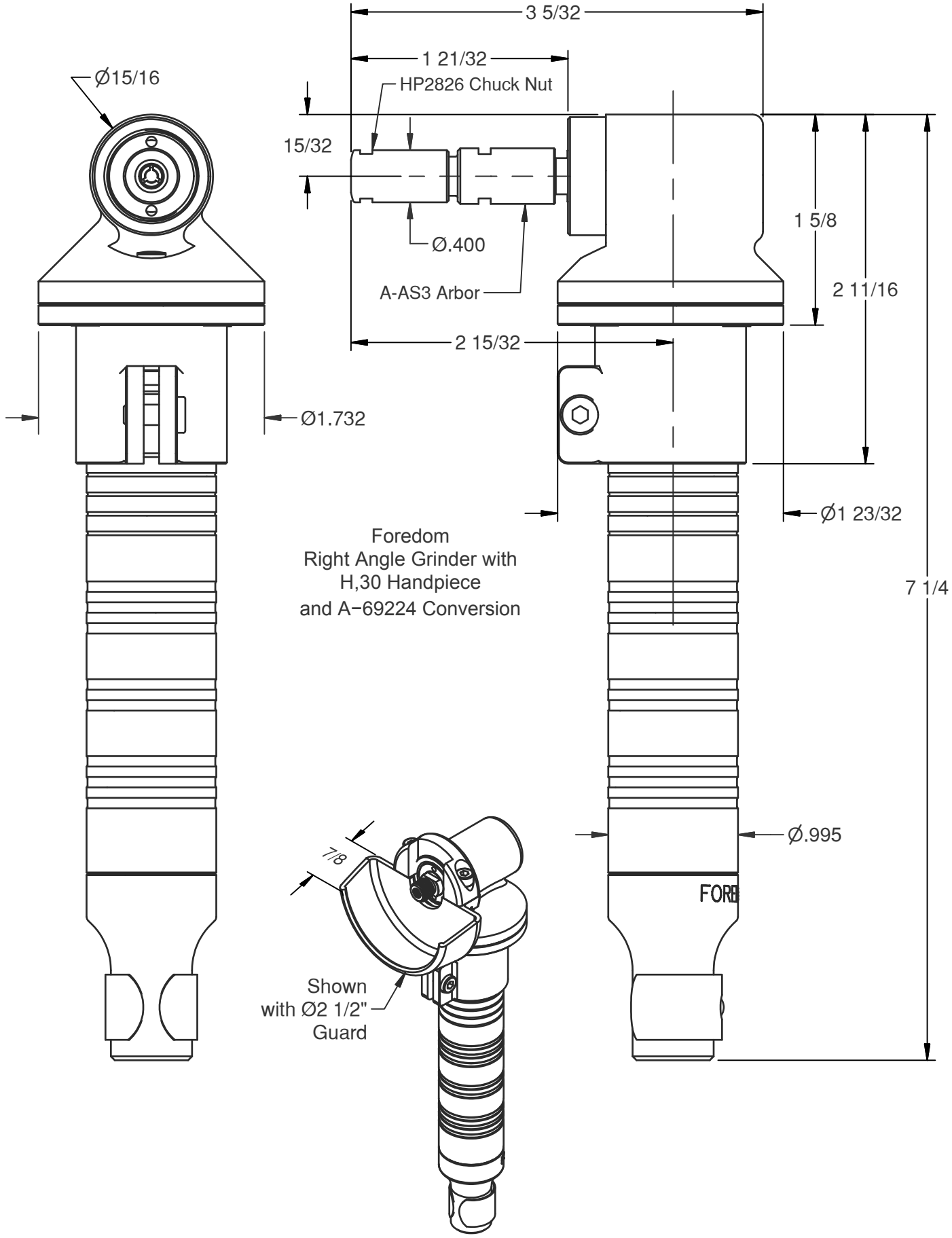
3 5/32
1 21/32
HP2826 Chuck Nut
Ø15/16
15/32
Ø.400
A-AS3 Arbor
1 5/8
2 11/16
2 15/32
Ø1.732
Ø1 23/32
Foredom
Right Angle Grinder with
H,30 Handpiece
and A−69224 Conversion
7 1/4
Ø.995
7/8
Shown
with Ø2 1/2"
Guard