Parts List
L and PG Motor Series

NOTE:
The Bridge Rectifier (22), Wire Harness, and Brush Tube Assemblies (17) are fastened to the inside of the End Bell Housing(16) with: Apollo 2240 cyanoacrylate adhesive and Loctite Tak Pak 7452 Accelerator or equivalent.

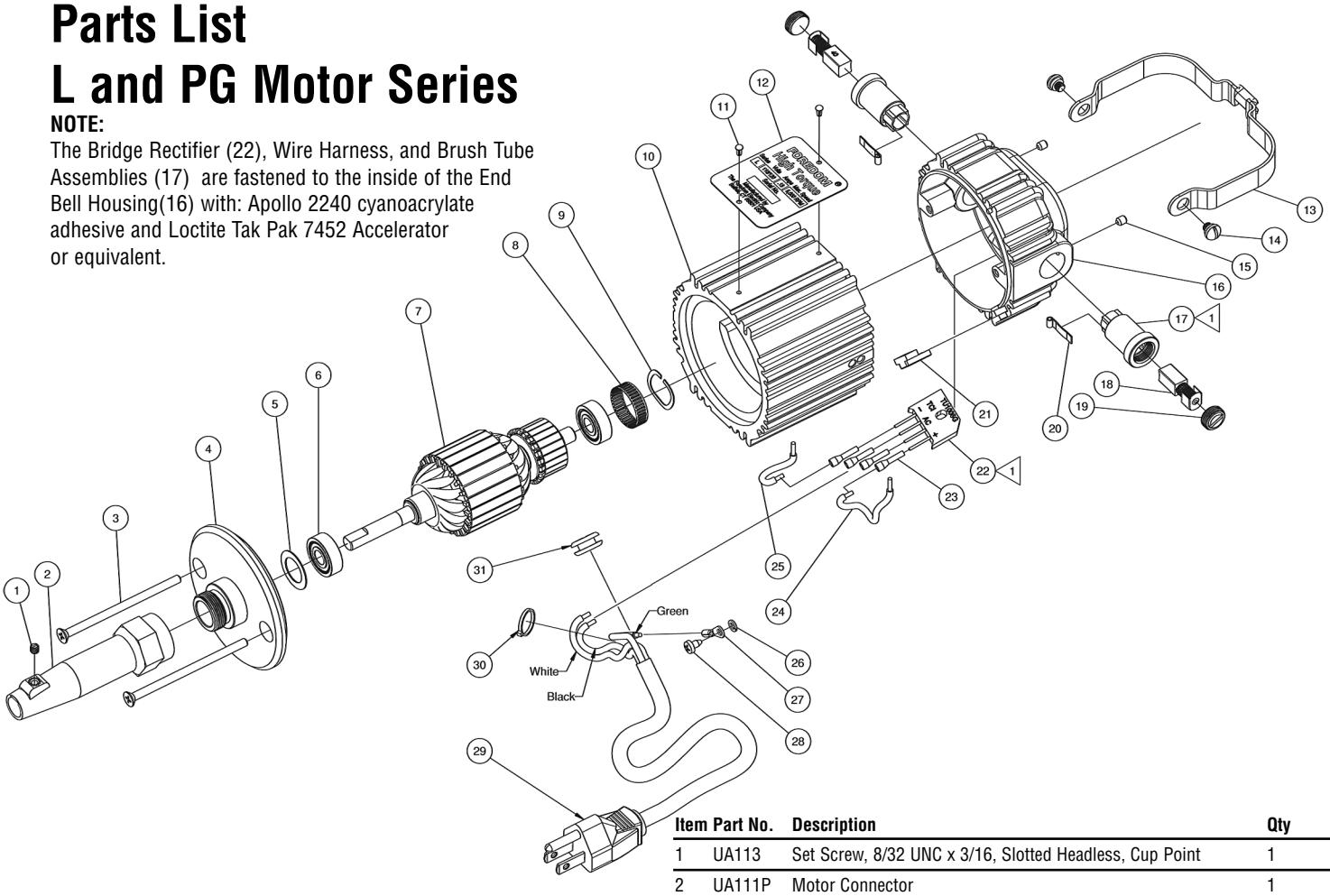

Motor Series	Motor Part No.	Armature Assembly (Incudes 2 Ball Bearings) Part No.	Specification Nameplate Part No.
L 115V	MP9O-677	MP325	UA10384-L
L 230V	MP9O-676	MP326	UA10384-L2
PG 115V	MP90-577	MP321	F-PG-GEN
PG 230V	MP90-606	MP322	F-PG-GEN

Item	Part No.	Description	Qty	
1	UA113	Set Screw, 8/32 UNC x 3/16, Slotted Headless, Cup Point	1	
2	UA111P	Motor Connector	1	
3		Machine Screw 8/32 UNC x 2 15/16", 100° Cross Recessed Flat Head	2	—
4		End Plate	1	—
5		Washer, Plain,Ø..859 x Ø..562 x .020, Steel	1	—
6	HP61	Ball Bearing, Ø22mm x Ø8mm x 7mm	2	
7	See table	Armature Assembly (Includes 2 Ball Bearings)	1	—
8		Tolerance Ring, AN 22X7C	1	—
9		Washer, Wavy Spring, Ø..862 x Ø..673 x .109 x .014 Thick	1	—
10		Center Housing	1	—
11	UA577	Grooved Stud, Ø.086 x .187	2	
12	See Table	Specification Nameplate	1	—
13	UA105	Motor Hanger	1	
14	UA106	Motor Hanger Screw	2	
15		Set Screw, 8 32 UNC x 3/16, Hexagon Socket, Cup Point	2	—
16		End Bell Housing	1	—
17	MP318	Brush Tube	2	
18	MP319P	Brush, Motor (Pair)	1	
19	MP12O	Cap, Brush Tube	2	
20		Terminal, Brush	1	—
21		Grommet Plate	1	—
22		Bridge Rectifier 8Amp 1000V	1	—
23		Shrink Tubing 5/8"	4	—
24		Wire Red 2.5" 18 AWG 600V 105C TEW UL CSA	1	—
25		Wire Black 2.5" 18 AWG 600V 105C TEW ULCSA	1	—
26		Lock Washer, #6, Regular Helical Spring	1	—
27		Terminal Ring, #6	1	—
28		Self Tapping Screw, #6 -32 x 1/4, Cross Recessed Pan Head	1	—
29	CP10541	Cordset, Male, NEMA 5-15P	1	
30		Tie Rap	1	—
31		Strain Relief Grommet	1	—

FOREDOM®
The Foredom Electric Company
16 Stony Hill Rd., Bethel, CT 06801 • 203-792-8622
Fax: 203-796-7861 • www.foredom.net
Email: customerservice@blackstoneind.com

Form 1166 n 11/11